PRODUCT SPECIFICATION

产品规格书

客户名称 Customer ：

产品型号 Part No. ： HP-2R7-J106VYJ19

发布日期 Issue Date ： 2022.02

编制 Prepared	审核 Checked	批准 Approved
客户核准 Customer Approval		

KAMCAP

锦州凯美能源有限公司

Jinzhou Kaimei Power Co.,Ltd

锦州凯美能源有限公司保留所有权

并可自行变更设计规格

Jinzhou Kaimei Power Co.,Ltd reserves the right to change the design specifications.

地址：辽宁省 锦州市 凌河区 锦义街 141 号

Add：141 Jinyi Street, Linghe District, Jinzhou City, Liaoning Province

网址(Web):www.kamcap.com

1. 适用范围 SCOPE:

本产品规格书对产品的性能，测试方法进行了规范，作为技术确认的依据。

This product specification specifies the product's performance and test methods as a basis for technical validation.

2. 一般特性 General Specification:

2.1 产品应用范围（Product application range）：

◆**后备电源：RAM、雷管、汽车记录仪、智能仪表、真空开关、数码相机、马达驱动**

◆Backup power: RAM, detonator, car recorder, smart meter, vacuum switch, digital camera, motor drive

◆**储能：智能三表、UPS、安防设备、通信设备、手电筒、水表、气表、车尾灯、小家电**

Energy storage: intelligent three meters, UPS, security equipment, communication equipment, flashlights, water meters, gas meters, taillights, small appliances.

◆**大电流工作：电气化铁路、智能电网控制、混合动力车、无线传输**

High current operation: electrified railway, smart grid control, hybrid vehicle, wireless transmission.

◆**大功率支持：风力发电、机车启动、点火、电动汽车等**

High-power support: wind power, locomotive start, ignition, electric cars, etc.

2.2 标准测试条件（Standard test conditions）：

本规格书标准测试条件为标准大气压，温度25℃，相对湿度小于60%。

The standard test conditions of this specification are standard atmospheric pressure, temperature 25 ° C, relative humidity less than 60%.

2.3 测试依据标准(Test basis)：

QC/T 741-2014《车用超级电容器》

QC/T 741-2014《Vehicle super capacitor》

KAMCAP

Q/GDW 11845—2018《电能计量设备用超级电容器技术规范》

Q/GDW 11845—2018《Technical specifications for supercapacitors for electric energy metering equipment》

DL/T 1652-2016《电能计量设备用超级电容器技术规范》

DL/T 1652-2016《Technical specifications for supercapacitors for electric energy metering equipment》

IEC62391-1-2006

3. 产品结构 Structure：

本产品采用圆柱形电容器外形。内部为卷绕式结构，正负电极片之间用隔膜隔开，并浸有电解液成分；铝制外壳与橡胶塞进行密封，引出方式为引线式引出，引出极在产品同侧。

This product uses a cylindrical capacitor shape. The inside is a winding structure, the positive and negative electrode sheets are separated by a diaphragm, and are immersed in electrolyte components; the aluminum shell is sealed with a rubber plug, and the lead-out method is lead-out, and the lead-out pole is on the same side of the product.

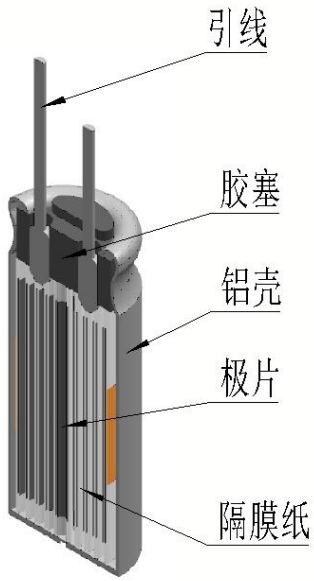

KAMCAP

4. 基本特性 General Specification

项目Project		参数	测试条件 Test Condition
额定电压（25℃）U_0 Rated Voltage (25℃) U_0		2.7V	/
工作温度范围 Category Temperature Range		-40~+70℃	/
存储温度范围（at 0V） Storage temperature range (at 0V)		-40~+70℃	/
额定容量（25℃） Rated Capacitance (25℃)		10F	ΔV = 2.16V-1.35V
容量允许偏差 Permitting Capacitance Error		0%~+30%	/
内阻（ESR） Internal Resistance	AC@1kHz	40 m Ω	/
	DC	60m Ω	/
额定电流（25℃） Nominal Current (25℃)		2.4A	**充电至额定电压U_0，5s放电至1/2 U_0** Charge to rated voltage U_0，5sdischarge to 1/2 U_0
最大电流（25℃） Max Current (25℃)		8.4A	**充电至额定电压U_0，1s放电至1/2 U_0** Charge to rated voltage U_0，1sdischarge to 1/2 U_0
72h漏电流（25℃） Leakage Current at 72h (25℃)		0.028mA	/
质量（典型M） Weight m		4.8g	/
存储能量（at U_0）E Max. stored energy（at U0		10.1mWh	$E_{Max} = \frac{1/2 \times CV^2}{3600} * 1000$
能量密度（at U_0） Energy Density (at U_0)	**质量比** Gravimetric	2.1Wh/kg	$E_{Max} = \frac{1/2 \times CV^2}{3600 \times m}$
功率密度（at U_0） Power Density (at U_0)	**质量比** Gravimetric	6.3 kW/kg	$P_{Max} = \frac{V^2}{4 \times ESR_{DC} \times m}$

KAMCAP

5. 特性指标 Performance Index

项 目 Item		规格/条件 Specification/Condition
01	**低温性能** Low Temperature	**置于-40℃环境，2小时，外观无损伤，无漏液，容量变化率不超过±30%。** Placed in an environment of -40℃ for 2 hours, there is no damage to the appearanc no leakage, and the capacity change rate does not exceed ±30%。
	高温性能 High temperature	**置于+70℃环境，16小时，外观无损伤，无漏液，容量变化率不超过±30%。** Placed in a +70℃ environment, 16 hours, no damage to the appearance, no leakag and the capacity change rate does not exceed ±30%。
02	**高温负荷特性** High temperature load	**+70℃ 施加额定电压，1000h后，｜△C/C｜≤30%，ESR≤4倍规定值。** +70℃Apply rated voltage, after 1000h, ｜△C/C｜≤30%, ESR≤4 times the specified value.
03	**高温存储** Hig temperature storage	**+70℃,96h，常温下静置2h后，外观无损坏，无漏液，｜△C/C｜≤10%，ESR≤2倍初始值（25℃）** +70℃, 96h, after 2h standing at room temperature, the appearance is not damaged, no leakage, ｜△C/C｜≤10%, ESR≤2 times the initial value (25℃)
	低温存储 LOW temperature storage	**-40℃,96h，常温下静置2h后，外观无损坏，无漏液，｜△C/C｜≤10%，ESR≤2倍初始值（25℃）** -40℃, 96h, after 2h standing at room temperature, the appearance is not damaged, no leakage, ｜△C/C｜≤10%,ESR≤2 times the initial value (25℃)
04	**稳态湿热特性** The steady state damp heat test	**+40℃, 90--95%RH，240h，常温放置2小时，｜△C/C｜≤30%，ESR≤4倍规定值。** +40℃, 90-95%RH, 240h, 2 hours at room temperature, ｜△C/C｜≤30%, ESR≤4 time the specified value.
05	**循环耐久性** Cycle life Expectancy	**常温下，在额定电压和半额定电压之间循环充放电50万次。每次充放电之间搁置5s。｜△C/C｜≤30%，ESR≤4倍初始值(25℃)** At room temperature, cycle charge and discharge 500,000 times between rated voltage and half rated voltage. Shelf for 5s between each charge and discharge. ｜△C/C｜≤30%,ESR≤4 times the initial value (25℃)

KAMCAP

6. 产品标识 KAM MARK

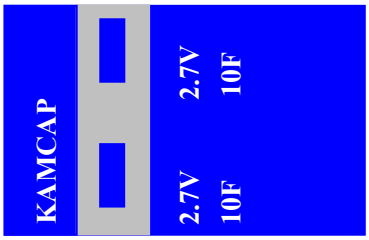

① ② ③

①凯美商标 KAM Brand

②负极标志 Cathode sign

③额定容量及额定电压

Rated capacitance and rated voltage

7. KAM产品外形尺寸图 Dimension (Unit :mm)

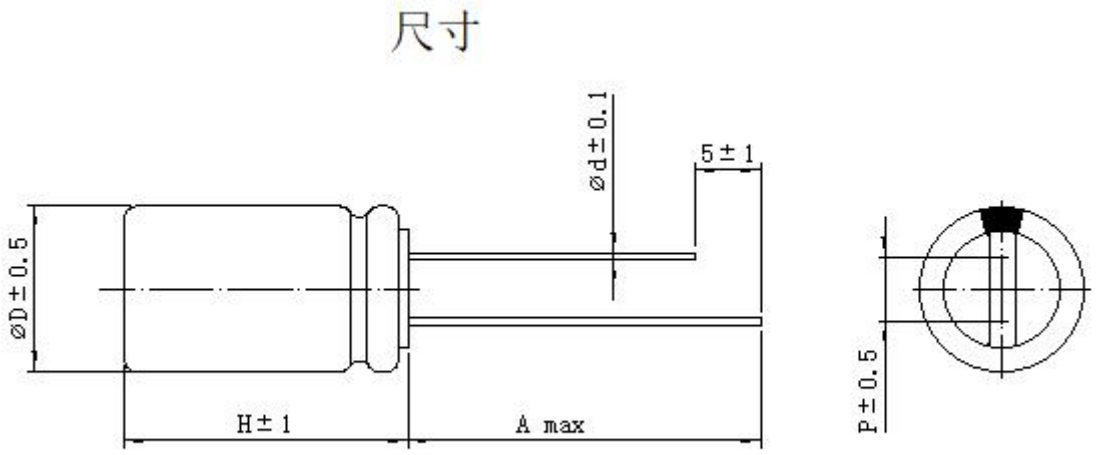

产品直径 Product diameter ΦD (mm)	产品长度 Product Length H (mm)	引线距离 Pin distance P (mm)	引线直径 Pin diameter Φd (mm)	引线长度 Pin length A (mm)
12.5	34	5.0	0.6	30

8. 产品包装 Packing:

内包装箱尺寸 Size of inner packing (L×W×H)mm	外包装箱尺寸 Size of outer packing (L×W×H)mm
265×190×90	400×281×336

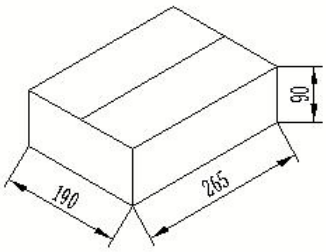

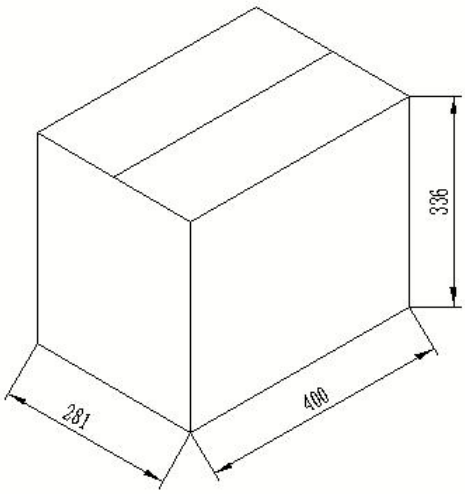

内包装箱 inner packing **外包装箱** outer packing

包装示意图 Packing Schematic

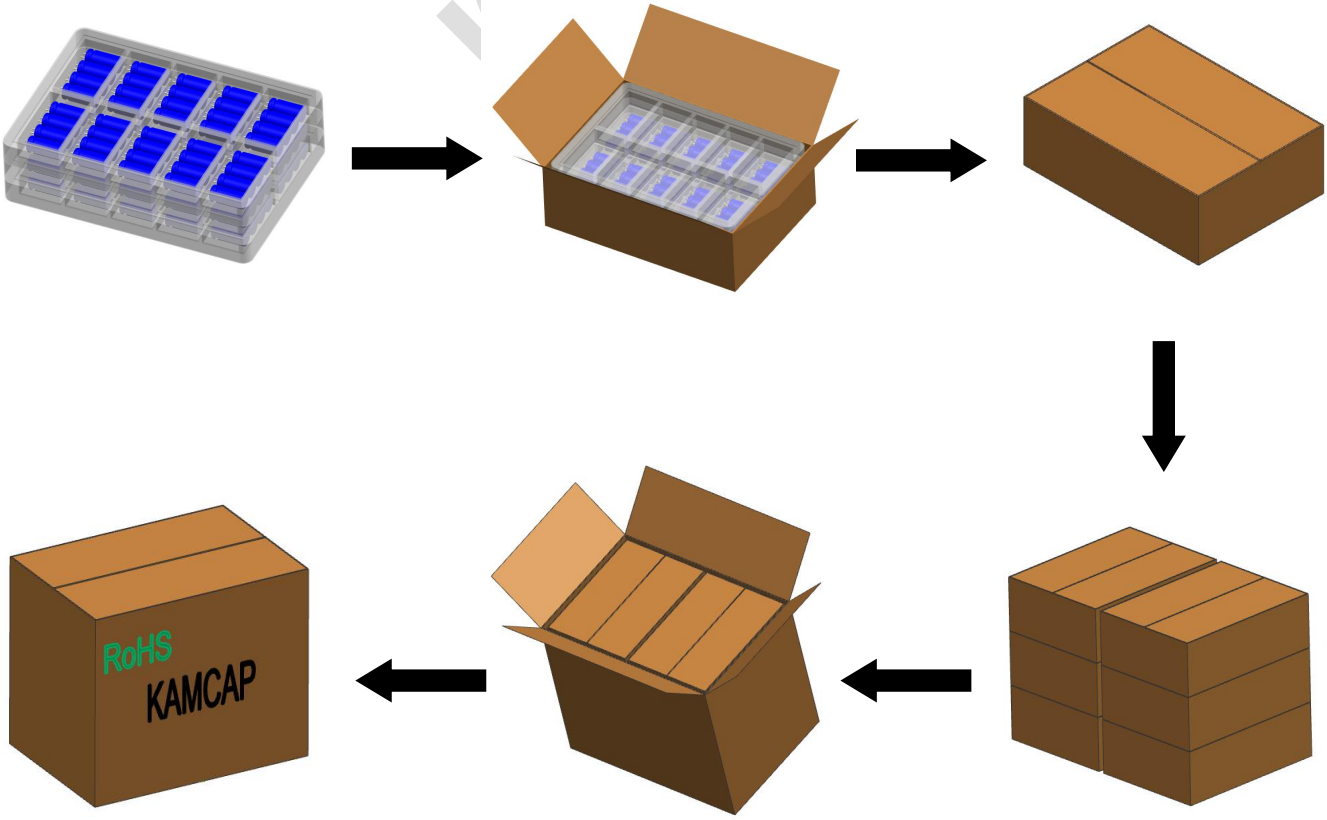

9. KAM性能测试方法 Performance testing method

9.1 依据标准 According to the standard

QC/T 741-2014《车用超级电容器》

QC/T 741-2014《Vehicle super capacitor》

Q/GDW 11845—2018《电能计量设备用超级电容器技术规范》

Q/GDW 11845—2018《Technical specifications for supercapacitors for electric energy metering equipment》

DL/T 1652-2016《电能计量设备用超级电容器技术规范》

DL/T 1652-2016《Technical specifications for supercapacitors for electric energy metering equipment》

9.2 容量测试 capacity test

9.2.1 测量电路 Measuring circuit

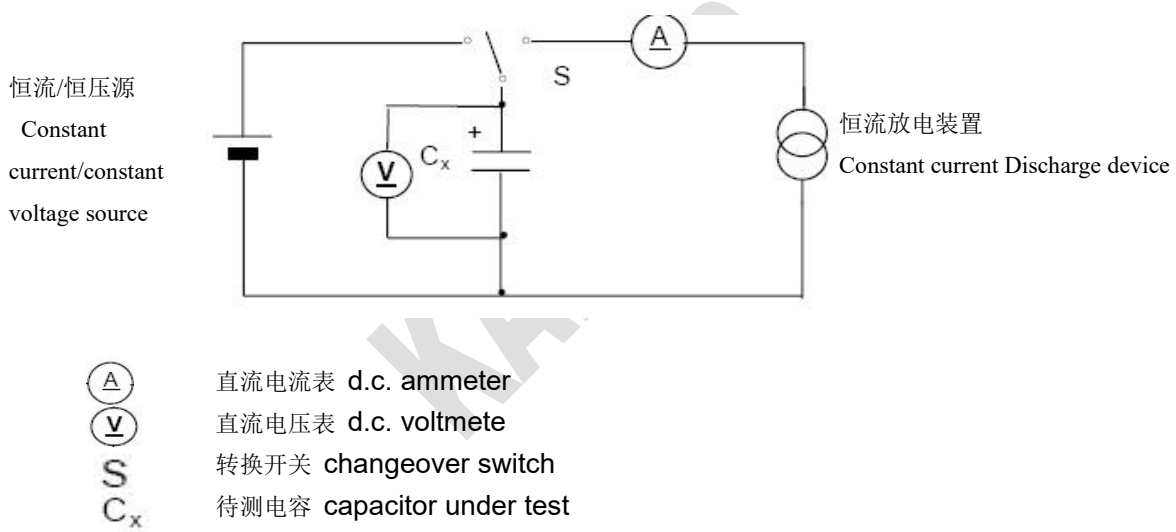

图1 – 恒流放电方法电路
Figure 1 – Circuit for constant current discharge method

9.2.2 测量方法 measuring method

◎ **恒流/恒压源的直流电压设定为额定电压（UR）。**

Setting the direct current voltage of constant current/constant voltage power supply as rated voltage (UR)

◎ **设定表1中规定的恒电流充放电装置的恒定电流值。**

Setting the constant current value of the constant current discharge device , according to Table 2 specified.

◎ **将开关S切换到直流电源，在恒流/恒压源达到额定电压后恒压充电30min。**

地址：中国・辽宁锦州市・
网址：www.kamcap.com

Turn the switch S to the d.c. power supply, and unless otherwise specified in the individual standards, apply voltage and charge for 30 min after the constant current/ constant voltage power supply has achieved the rated voltage.

◎ **在充电结束后，将开关S变换到恒流放电装置，以恒定电流进行放电。**

After charging for 30 min has finished, change over the switch S to the constant current discharge device , and discharge with a constant current.

◎ **测量电容器两端电压从U1到U2的时间t1和t2，如图2所示，根据下列等式计算电容量值：**

Unless otherwise specified in the individual standards, measure the time t1 and t2 where the voltage between capacitor terminals at the time of discharge reduces from U1 to U2 as shown in Figure 2, and calculate the capacitance value by the following formula:

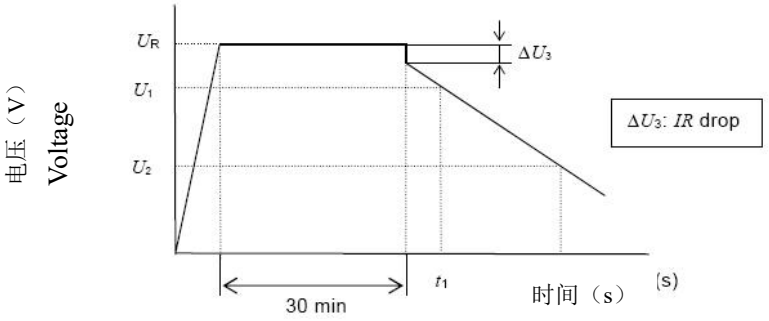

图2 电容器的端电压特性

Figure 2 – Voltage characteristic between capacitor terminals

$$C = \frac{I \times (t_2 - t_1)}{U_1 - U_2}$$

其中

C 容量 capacitance (F);

I 放电电流 discharge current（A）;

U_1 测量初始电压 measurement starting voltage（V）;

U_2 测量终止电压 measurement end voltage（V）;

t_1 放电电压达到U_1的时间 the time from discharge start to reach U1（s）;

t_2 放电电压达到U_2的时间 the time from discharge start to reach U2（s）。

放电电流I及放电电压下降的电压U_1和U_2参见表1。

Discharge current I and decrease in voltage of discharge voltage U1, U2 , according to table 1

地址：中国・辽宁锦州市・
网址：www.kamcap.com

表1 – 充放电条件 Table 1 – Discharge conditions

分类 Classification	**SE、HE、HT(叠片产品** Coin type product)	**SP、HP、HT、LR**	**备注**
应用 Application	**能量存储**Energy storage	**瞬时功率、功率**Instantaneous power, power	$I_1 = \frac{C_R \times U_R}{3600}$
充电时间Charging time	30min	30min	
I（A）	$I = 5I_1$	$I = 40I_1$	
U1	**充电电压的80%值（0.8×UR）** 80% of the charging voltage（0.8×UR）		
U2	**充电电压的50%值（0.5×UR）** 50% of the charging voltage（0.5×UR）		

备注 Remarks：

***C_R*为超级电容器的标称容量，单位为法拉**（F）；

C_R is the nominal capacity of the supercapacitor in Farads (F);

***U_R*额定电压，单位为伏**（V）；

U_R rated voltage in volts (V)；

***I* 为充放电测试电流，单位为安培**（A）；

I is the charge and discharge test current in amps（A）；

I1为超级电容器1倍充放电电流，单位为安培（A）

*I*1is a supercapacitor 1 times charge and discharge current in amps（A）

9.2.3设备 Equipmen：

A、**ARBIN超电容测试系统** ARBIN super capacitor test system

B、**线性直流稳压电源** Linear DC stabilized voltage power supply

C、**恒流放电装置** Constant current discharging device

D、**电压记录仪** Voltage recording device

9.3交流内阻测试 AC internal resistance test

9.3.1测量电路 Measuring circuit

如图3所示测量电路进行测试 As shown in the measurement circuit for testing

KAMCAP

地址：中国・辽宁锦州市・
网址：www.kamcap.com

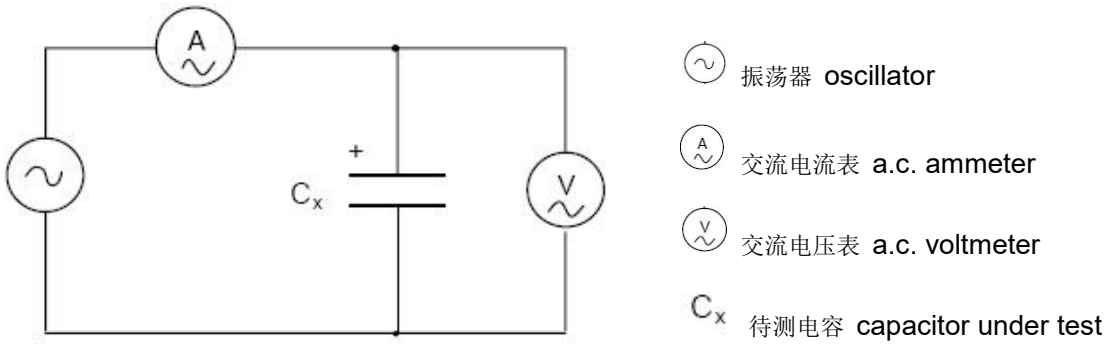

图3– 交流阻抗方法电路

Figure 3–Circuit for a.c. resistance method

9.3.2测量方法 Measuring method

电容器的内阻Ra应通过下式计算：

The internal resistance Ra of a capacitor shall be calculated by the following formula:

$$R_a = \frac{U}{I}$$

其中 where

Ra **交流内阻** a.c. internal resistance（Ω）；

U **交流电压有效值** the effective value of a.c. voltage（V r.m.s）；

I **交流电流有效值** the effective value of a.c. current（V r.m.s）。

测量电压的频率，应为1kHz。

The frequency of the measuring voltage shall be 1 kHz

交流电流应为1mA至10mA。

The a.c. current shall be from 1 mA to 10 mA

9.3.3设备 equipment：

内阻测试仪Internal resistance tester

KAMCAP

地址：中国・辽宁锦州市・
网址：www.kamcap.com

10.特性曲线 Characteristic curve

(1) 漏电流曲线 Leakage curve

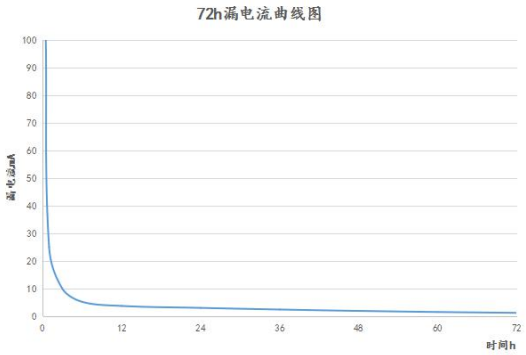

(2)温度特性 temperature characteristics

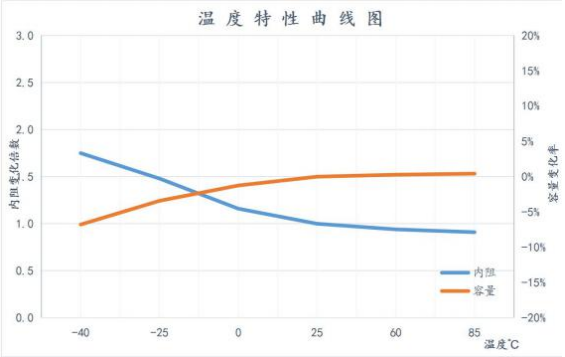

(3)高温耐久特性曲线

High temperature durability characteristic curve

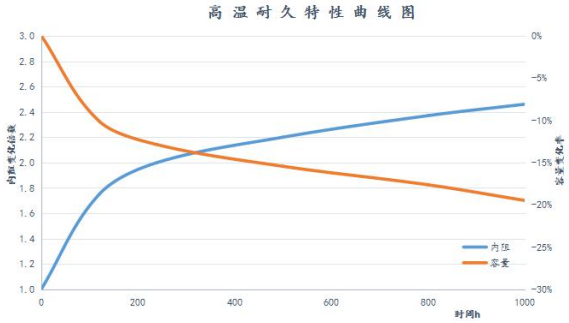

KAMCAP

****以上曲线均为趋势曲线，不同型号产品数据不同，如有需求请与技术联系。**

******The above curves are all trend curves, and the data of different models are different. If you have any requirements, please contact the technology.

11. 使用注意事项 Precautions for use

11.1 超级电容器不可使用在如下状态：

Supercapacitors cannot be used in the following states

a) **超过标称温度的温度** temperature above the nominal temperature

当电容器温度超过标称温度时，将会导致电解液分解，同时电容器会发热，容量下降，而且内阻增加，寿命缩短。

When the temperature of the capacitor exceeds the nominal temperature, it will cause the electrolyte to decompose, and the capacitor will heat up and the capacity will drop.Moreover, the internal resistance is increased and the life is shortened.

b) 超过额定电压的电压 voltage exceeding the rated voltage

地址：中国 • 辽宁锦州市 •
网址：www.kamcap.com

当电容器电压超过标称电压时，将会导致电解液分解，同时电容器会发热，容量下降，而且内阻增加，寿命缩短。所以降低使用电压可提高使用寿命。

When the capacitor voltage exceeds the nominal voltage, it will cause the electrolyte to decompose, and the capacitor will heat up and the capacity will drop.Moreover, the internal resistance is increased and the life is shortened. Therefore, reducing the voltage used can increase the service life.

c) 逆电压或交流电压的加载 loading of reverse voltage or alternating voltage

11.2 周围温度对超级电容器的影响 Influence of ambient temperature on supercapacitors

超级电容器的使用寿命受使用温度的影响，一般情况下，使用温度提升10℃，超级电容器的寿命会缩短一半，请尽量在低于最高使用温度的低温环境下使用。超过最高使用温度使用的话，可能会造成特性急剧劣化，破损。

超级电容器的使用温度不仅要确认设备周围温度，内部温度，还要确认设备内发热体（功率晶体管、电阻等）的放射热，纹波电流引起的自行发热温度。此外，还请勿将发热体安装在超级电容器的附近。

The service life of supercapacitors is affected by the temperature of use. Under normal circumstances, the temperature of the supercapacitor is reduced by 10 °C, and the life of the supercapacitor is shortened by half. Try to use it in a low temperature environment below the maximum operating temperature. If it is used beyond the maximum operating temperature, the characteristics may deteriorate rapidly and be damaged.

The temperature of the supercapacitor should be determined not only by the temperature around the device, but also by the internal temperature. The radiant heat of the heating element (power transistor, resistor, etc.) in the device and the self-heating temperature caused by the ripple current are also confirmed. Also, do not install the heating element near the supercapacitor.

11.3 请按电容器的正负极标识正确使用。

Please use the positive and negative signs of the capacitor correctly

11.4 请避免在以下环境中使用超级电容器。

Please avoid using super capacitors in the following environments.

a) 直接溅水、盐水及油的环境、或处于结露状态、充满着气体状的油分或盐分的环境。

Environment where direct splashing water, salt water and oil are present, or in a dew condensation state, filled with gaseous oil or salt.

b) 充满着有害气体（硫化氢、亚硫酸、氯、氨、溴、溴化甲基等）的环境。

An environment filled with harmful gases (hydrogen sulfide, sulfurous acid, chlorine, ammonia, bromine, methyl bromide, etc.).

c) 溅上酸性及碱性溶剂的环境。

地址：中国・辽宁锦州市・
网址：www.kamcap.com

KAMCAP

An environment where acidic and alkaline solvents are splashed.

d) 阳光直射或有粉尘的环境。

Direct sunlight or dusty environment.

e) 遭受过度的振动及冲击的环境。

An environment that is subject to excessive vibration and shock.

11.5 在焊接过程中要避免使电容器过热（1.6mm的印刷线路板，焊接时应为260℃，时间不超过5s）。

In the welding process to avoid overheating the capacitor (1.6mm printed circuit board, welding should be 260 ° C, the time does not exceed 5s).

11.6 请避免在超级电容器的引出极间或连接板焊点间进行电路配线。

Please avoid circuit wiring between the lead terminals of the supercapacitor or the solder joints of the connecting plates.

11.7 过电压及超过工作温度范围等超出额定条件使用时，可能导致压力阀动作，电解液会喷出。因此，请采用已考虑到此异常状况可能发生的设计方法。

When the overvoltage and the operating temperature range exceed the rated conditions, the pressure valve may act and the electrolyte may be ejected. Therefore, please adopt a design method that has taken into account this abnormal condition.

11.8 快速充放电时，充电开始时、放电开始时，会产生由内部阻抗导致的压降(也叫IR降），所以，请采用已考虑到电压变化幅度的设计方法。

In the case of rapid charge and discharge, a voltage drop due to internal impedance (also called IR drop) occurs at the start of charging and at the beginning of discharge. Therefore, use a design method that takes into account the magnitude of the voltage change.

11.9 功率型大容量产品（约10F以上产品）充电状态下如果端子短路，会有数百安培的电流流过，危险。请不要在充电状态下进行安装和拆卸。

Power type large-capacity products (about 10F or more) If the terminal is short-circuited during charging, there will be hundreds of amps of current flowing, which is dangerous. Please do not install or disassemble while charging.

11.10 不要把电容器放入已溶解的焊锡中，只在电容器的导针上粘焊锡。不可让焊接用焊棒接触电容器热缩管。

Do not put the capacitor in the dissolved solder, only solder the solder on the guide pin of the capacitor. Do not allow the welding rod to contact the capacitor heat shrink tubing.

11.11 安装后，不可强行扭动或倾斜电容器。

Do not forcibly twist or tilt the capacitor after installation.

11.12 超级电容器串联使用时，存在单体间的电压均衡问题。

KAMCAP

地址：中国・辽宁锦州市・
网址：www.kamcap.com

When the supercapacitors are used in series, there is a voltage balance problem between the cells.

12. 保存要求Saving request

12.1 不可存放于相对湿度大于85%或含有有毒气体的场所和高温、高湿的环境中。建议长期储存在温度-30℃~50℃、相对湿度小于60%的环境中。

Do not store in a place with a relative humidity greater than 85% or containing toxic gases and in a high temperature, high humidity environment. It is recommended to store in an environment with a temperature of -30℃~50℃ and a relative humidity of less than 60% for a long time.

12.2 避免以下环境中保存超级电容器

Avoid preserving supercapacitors in the following environments

a) 直接溅水、盐水及油的环境、或处于结露状态、充满着气体状的油分或盐分的环境。

Environment where direct splashing water, salt water and oil are present, or in a dew condensation state, filled with gaseous oil or salt.

b) 充满着有害气体（硫化氢、亚硫酸、氯、氨、溴、溴化甲基等）的环境。

An environment filled with harmful gases (hydrogen sulfide, sulfurous acid, chlorine, ammonia, bromine, methyl bromide, etc.).

c) 溅上酸性及碱性溶剂的环境。

An environment where acidic and alkaline solvents are splashed.

d) 阳光直射或有粉尘的环境。

Direct sunlight or dusty environment.

e) 遭受过度的振动及冲击的环境。

An environment that is subject to excessive vibration and shock.

13. 关于废弃 About discarding

不要随意丢弃，遵循法令或地方公共团体等指定的条例，将废弃品交给工业废弃物处理商。

Don't throw it away randomly. Follow the laws and regulations or local public organizations and other designated regulations, and hand over the waste to the industrial waste disposal company.

其它超级电容器方面的问题，请向生产厂家咨询或参照超级电容器使用说明的相关技术资料执行。

For other supercapacitor problems, please consult the manufacturer or refer to the relevant technical data of the supercapacitor instructions.

KAMCAP

地址：中国・辽宁锦州市・
网址：www.kamcap.com