Specification of Microphone

RoHS Compliance & Halogen Free

LinkMems P/N: LUE6027LFB423CD-O5L15

Designed by	Checked by	Approved by
Kevin	Thomas	Hary

Customer Approval

Approved by:_____

IATF16949 ISO9001

Contents

1. Introduction 3

2. Electrical Characteristics 3

3. Frequency Response Curve 3

4. Test Setup 4

5. Measurement Circuit 4

6. Mechanical Characteristics 4

7. Special Condition 5

7.1. Environmental Condition 5

7.2. Storage Condition 5

8. Packaging Information 5

9. Reliability Test 6

Electret Condenser Microphone

1. Introduction

This document is the technical specification of electret condenser (ECM) Uni-Directional Microphone.

2. Electrical Characteristics

Test Condition: V_{DD}=2.0V, RL=2.2 kΩ, 20±2℃, 55±20%R.H., unless otherwise specified.

Specification	Symbol	Test Conditions	Min.	Typ.	Max.	Unit
Directivity			Uni-directional			
Sensitivity Range	S	94dBSPL @1kHz	-45	-42	-39	dB
Output Impedance	Z_{out}	94dBSPL @1kHz			2.2	kΩ
Current Consumption	I	V_S =2.0V RL=2.2 kΩ			350	μA
S/N Ratio	SNR	94dBSPL @1kHz A-Weighted		58		dB(A)
Operating Voltage	V_s		1.0	2.0	10.0	V
Sensitivity vs. Voltage	ΔS	94dBSPL @1kHz V_S=2.0V to 1.5V			-3	dB
Total Harmonic Distortion	THD	115dBSPL@1kHz		3		%

3. Frequency Response Curve

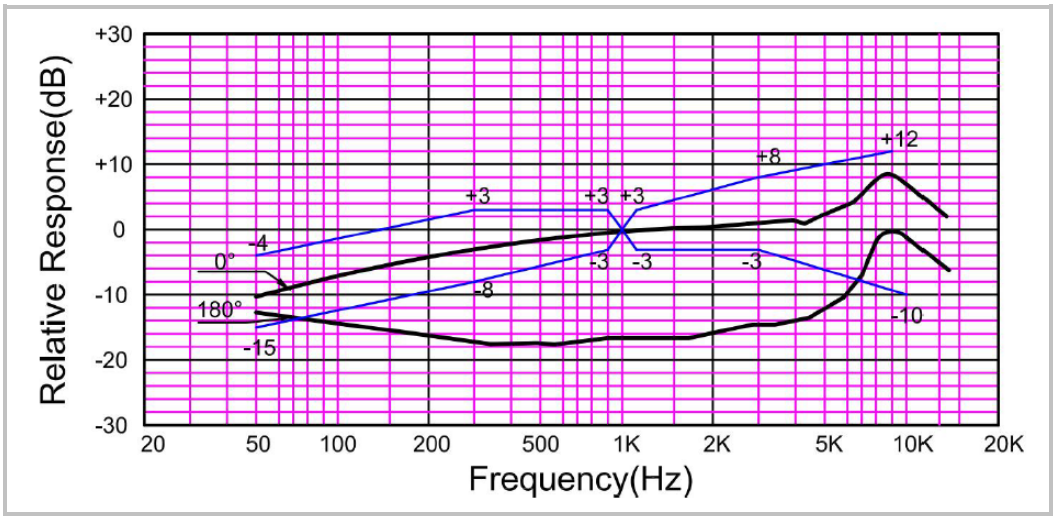

4. Test Setup (Sensitivity Test in Anechoic Room)

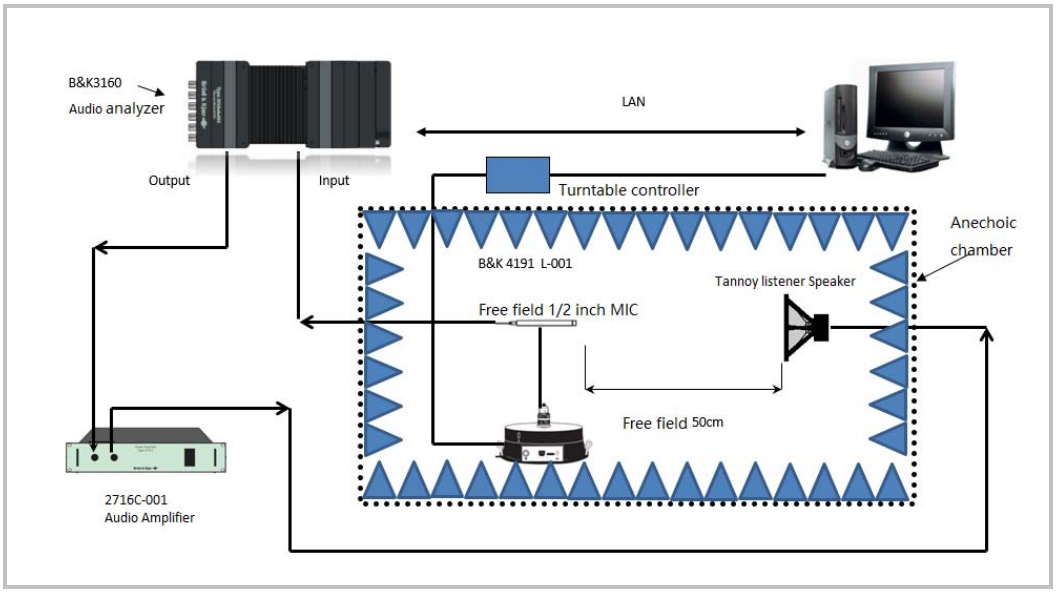

5. Measurement Circuit

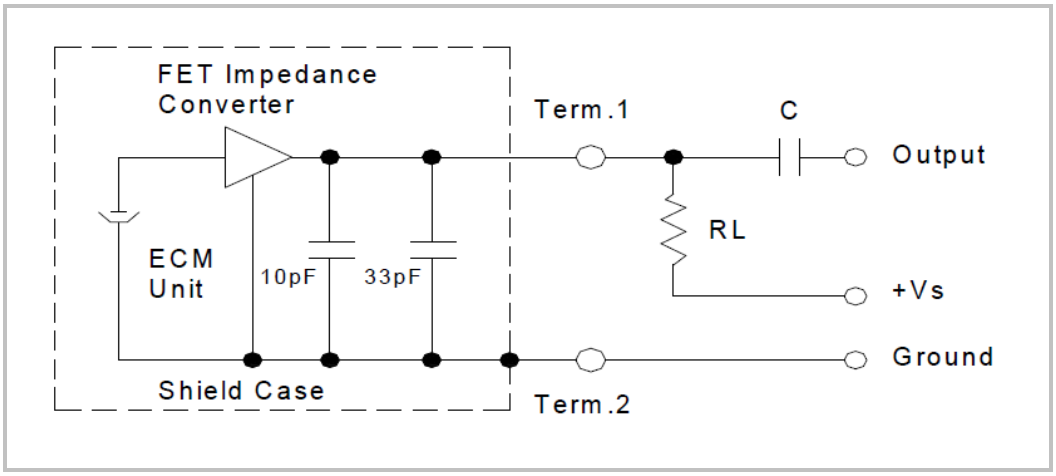

6. Mechanical Characteristics

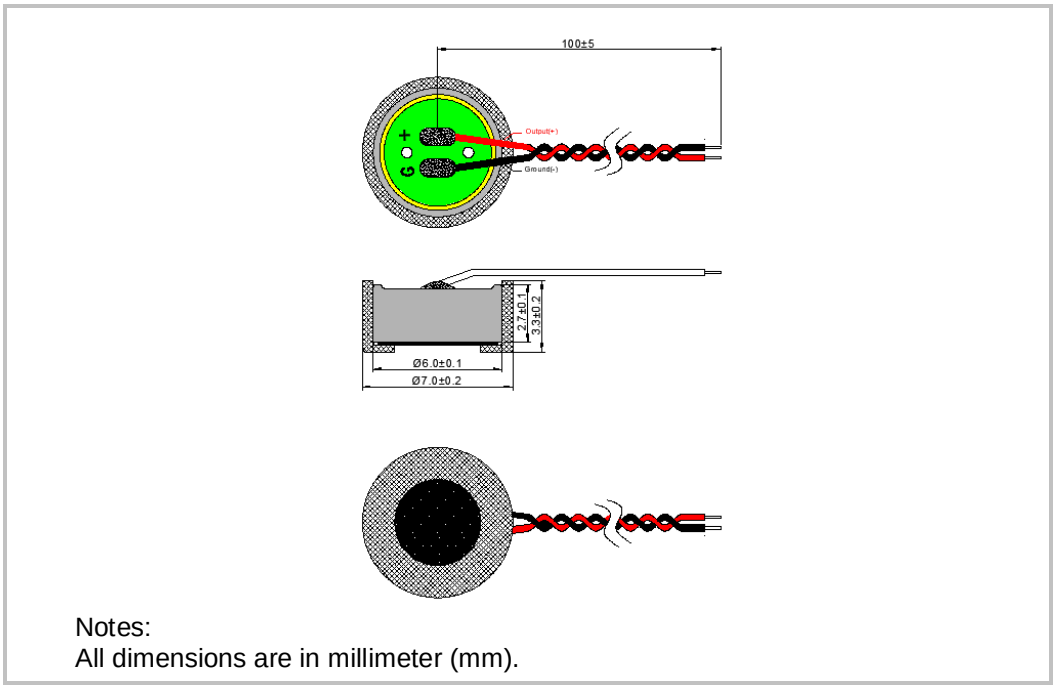

Notes:
All dimensions are in millimeter (mm).

7. Special Cautions

7.1 Environmental Condition

7.1.1 Storage Condition:-40℃～+70℃.

7.1.2 Operating Condition:-20℃～+60℃.

7.1.3 Arbitration Condition:20±1℃, R.H.63~67%, Air pressure:86~106Kpa.

7.2 Storage Condition

7.2.1 Keep ECM in warehouse with humidity less than 75%R.H. and without sudden temperature change, acid air, any other harmful air or strong magnetic field.

7.2.2 Please protect products against moist, shock, sunburn and pressure.

7.2.3 MSL Please take proper measures against ESD in the process. Please use the shipment package for long-term storage.

8. Packaging Information

TBD

9. Reliability Test

The samples should be placed in the room with 20±2℃, 65±5%R.H. for 3 hours at least before final measurement, unless otherwise specified.

Item	Detail	Standard
High temperature Test	After exposure at +85°C for 240 hours. (IEC68-2-2 Ba)	±3 dB
Low temperature Test	After exposure at -40°C for 240 hours. (IEC68-2-1 Aa)	±3 dB
Humidity & Heat Test	After exposure at +70°C and 93% relative humidity for 240 hours. (IEC68-2-3 Ca)	±3 dB
Thermal Shock	After exposure at -40°C for 30 minutes, at 20°C for 10 minutes, at+80°c for 30 minutes, at 20°C for 15 minutes,32 cycles.(IEC 68-2-14Na)	±3 dB
Vibration Test	To be no interference in operation after vibrations,10Hz to 55 Hz for 1 minute full amplitude1.52mm, for 2 hours at three axises in state of standard packing(IEC68-2-6 Fc)	±3 dB
Drop Test	To be no interference in operation after dropped to slippery marble floor each one time from 1.5 meter height, 5 times. (IEC68-2-32 Ed)	±3 dB
ESD	The microphone under test must be discharged between each ESD exposure without ground.(contact:±6kV, air:±8kV) (IEC 61000-4-2)	±3 dB

Specification Revisions

Revision	Description	Approved	Date
1.1	New Version Released	Hary	07/08/2024