M39029/58-360 pin and M39029/56-348 socket
850-002-22-360 pin and 850-01-22-348 socket

SIZE #22 STANDARD DUTY ELECTRICAL PIN AND SOCKET CONTACTS FOR USE WITH SUPERSEAL™ 38999 TYPE, ITS 301, ITS 345, IPT 301 AND IPT 345 SERIES CONNECTORS

	Mating End Size	Wire Accomodation	Military Part Number	Glenair Part Number
Pin	22	22-28 AWG	M39029/58-360	850-002-22-360
Socket	22	22-28 AWG	M39029/56-348	850-001-22-348



Pin Contact

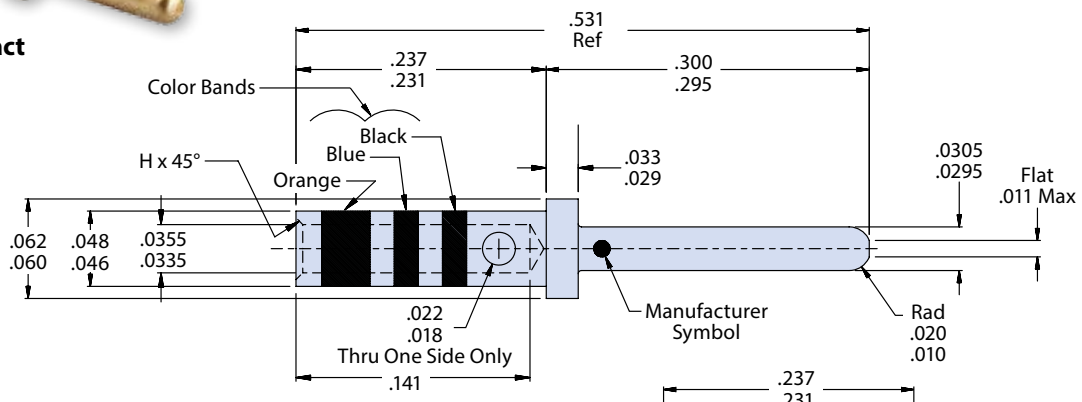

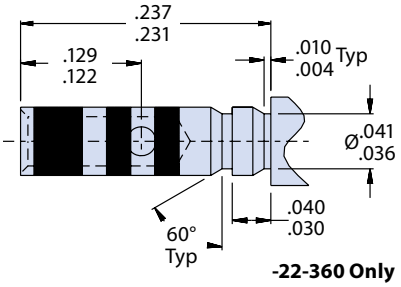

-22-360 Only



Socket Contact

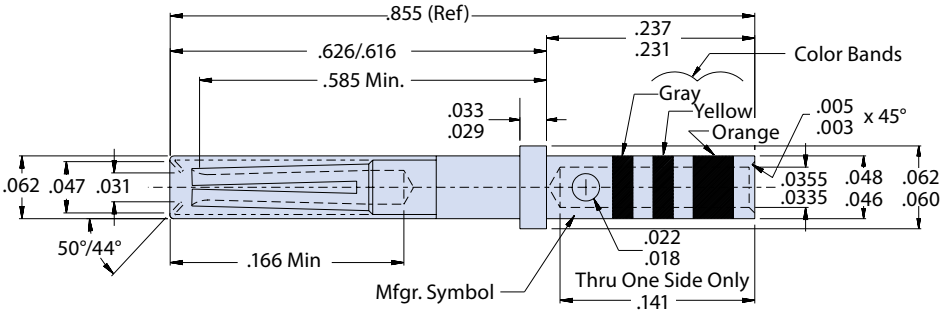

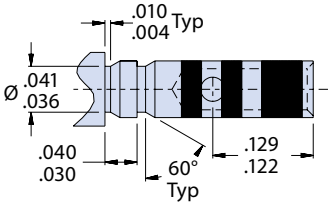

-22-348 Only

Termination Tools							
Size 22	Part Number	Military Number	AWG Handling	Crimp Tool	Positioner	Insertion Tool	Extraction Tool
Pin	850-002-22-360	M39029/58-360	22, 24, 26, 28	M22520/2-01 M22520/7-01	M22520/2-09 M22520//7-07	M81969/14-01 M81969/8-01	M81969/14-01 M81969/8-02
Socket	850-001-22-348	M39029/56-348	22, 24, 26, 28	M22520/2-01 M22520/7-01	M22520/2-07 M22520//7-05	M81969/14-01 M81969/8-01	M81969/14-01 M81969/8-02

© 2015 Glenair, Inc • 1211 Air Way, Glendale, CA 91201 • 818-247-6000 • www.glenair.com • U.S. CAGE code 06324 • SuperSeal™ Catalog
Dimensions in Inches (millimeters) are subject to change without notice.