REVISIONS					
REV.	ECN NO.	LOCATION	DESCRIPTION	DATE	DESIGN
A1	N/A		图面升级整理图面	2025.01.16	阿树
A2	ECN-P-2026010601	(A2)X1	产品尺寸变更，修改 PCB Layout PIN N+X	2026.01.06	阿树

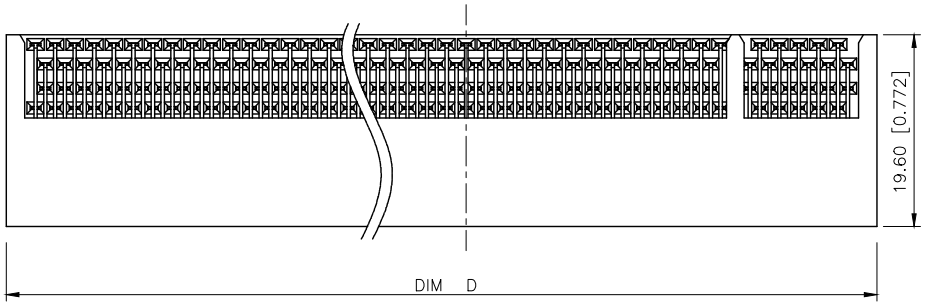

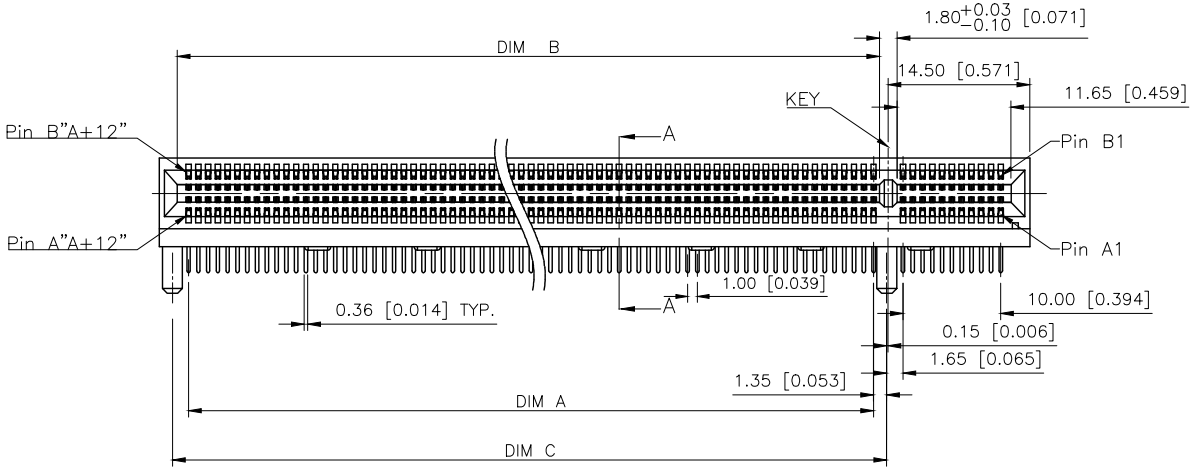

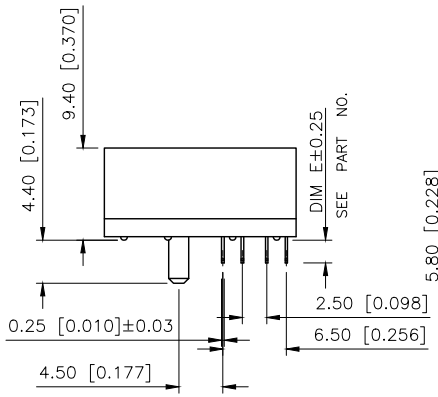

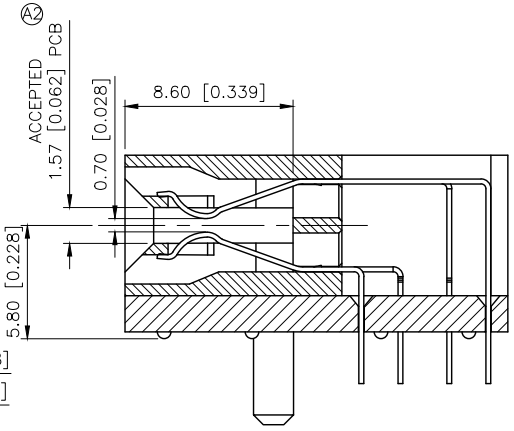

SCALE:A-A
2:1

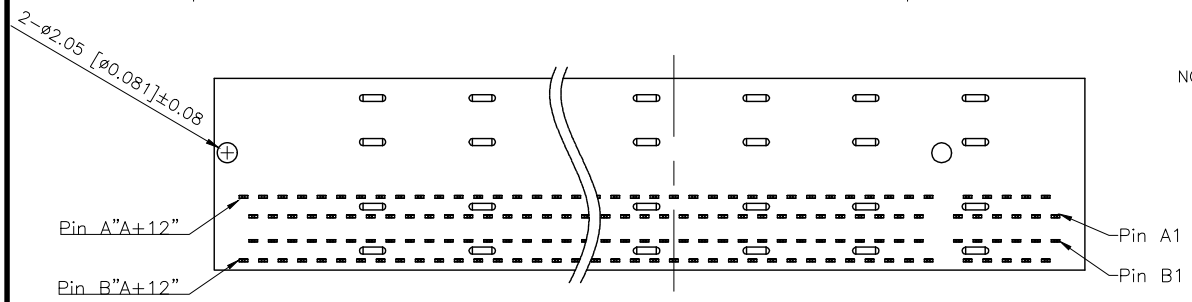

NOTES:
1. MATERIAL:
 1.1 INSULATION绝缘材料: PA9T,
  COLOR颜色: Black
 1.2 CONTACTS触点: COPPER ALLOY, T=0.25mm

2. FINISH饰面:
 2.1 CONTACT触点:
  SELECTIVE GOLD PLATING ON THE CONTACT AREA,
  100u" MIN. MATTE TIN PLATING ON THE SOLDER TAILS,
  50u" MIN. NICKEL UNDERPLATING OVERALL.

PART NO.:

X3091 W R-XX X-9T V15
① ② ③ ④ ⑤ ⑥ ⑦

①Series No
②Category:W-Wafer
③Welding Board Angle:R-Stright 90°
④No.of Pins: XX-36~164 Pin
⑤Tail Length (DIM "E") /:A :2.30mm
 B:3.1mm
⑥lastic material: PA9T/PA46 UL94V-0
⑦Contact Plating:V01-Gold Flash
 V15-Gold 15u"
 V30-Gold 30u"

DIMENSIONS				
POSITION	A±0.20	B±0.20	C±0.20	D±0.25
36	6	7.65	9.15	25.00
64	20	21.65	23.15	39.00
98	37	38.65	40.15	56.00
164	70	71.65	73.15	89.00

AuGLAR	±5°
X.	±0.40
X.x	±0.30
X.xx	±0.20
X.xxx	±0.15
UNSPECIFIED TOLERAuCES	

XKB 星创 Connection

DESIGN	阿树	VIEW:	MODEL TYPE: /
CHECKED		UNIT: mm/in	PART NO.: X3091WR-XXX-9TV15
APPROVED		SIZE: A4	DWG NO.:

XKB INDUSTRIAL PRECISION CO.,LIMITED

SCALE	PAGE	REVISION
N/A	1/2	A2

REVISIONS					
REV.	ECN NO.	LOCATION	DESCRIPTION	DATE	DESIGN
A1	N/A		图面升级整理图面	2025.01.16	阿树
A2	ECN-P-2026010601		修改 PCB Layout PIN N+X	2026.01.06	阿树

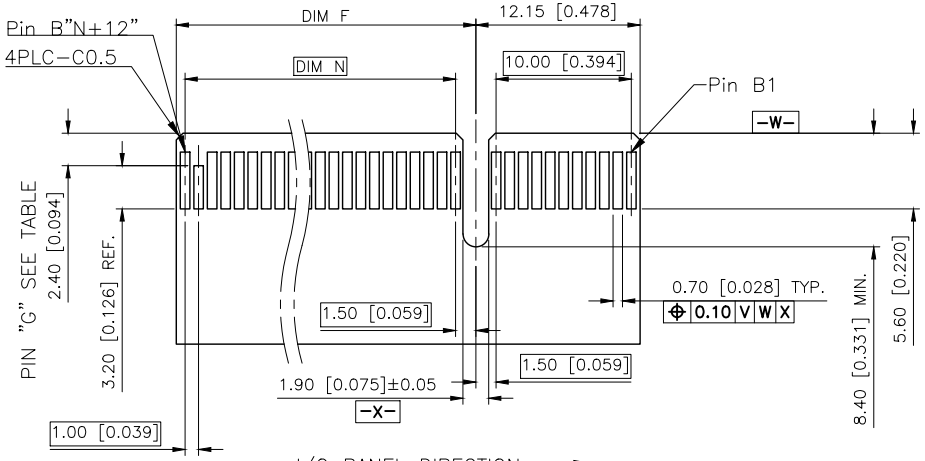

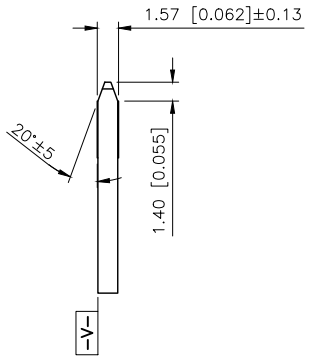

ADD-IN CARD EDGE-FINGER DIMENSIONS

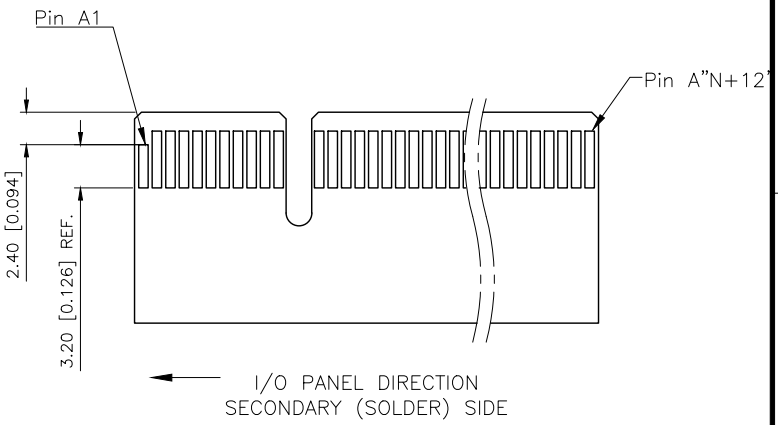

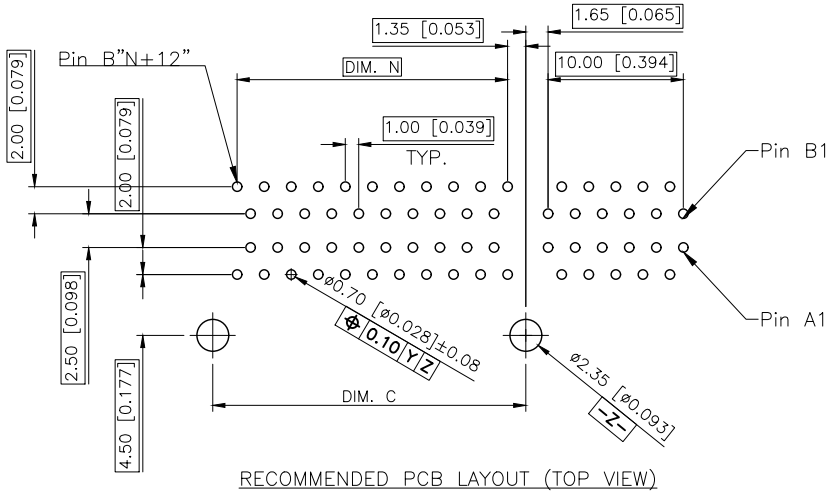

RECOMMENDED PCB LAYOUT (TOP VIEW)
FOR 36P, 64P, 164P
TOLERANCE: ±0.05
DATUM Y IS THE PCB SOLDER SURFACE

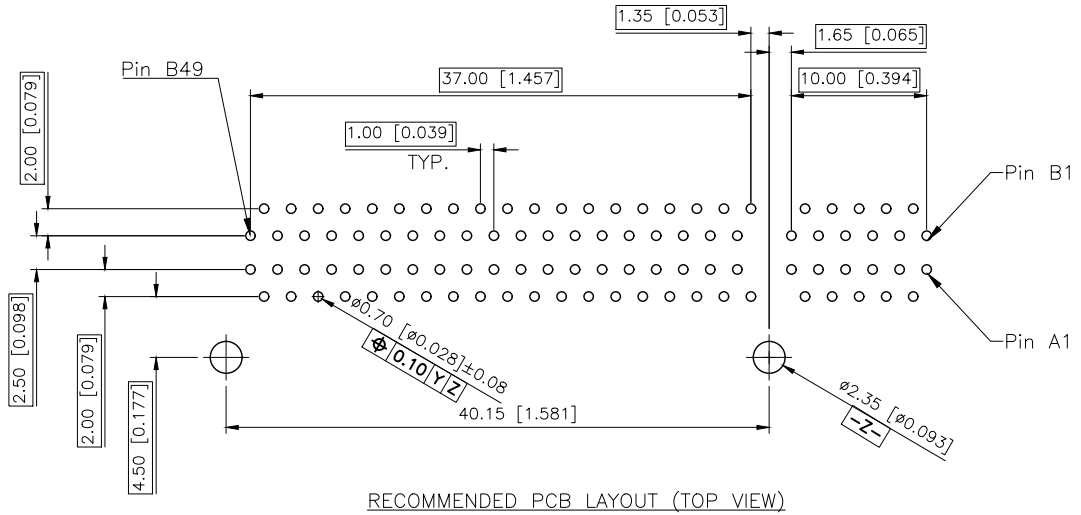

RECOMMENDED PCB LAYOUT (TOP VIEW)
FOR 98P
TOLERANCE: ±0.05
DATUM Y IS THE PCB SOLDER SURFACE

DIMENSIONS				
POSITION	N	C	F±0.20	G
36	6	9.15	8.15	B PIN#17
64	20	23.15	22.15	B PIN#31
98	37	40.15	39.15	B PIN#48
164	70	73.15	72.15	B PIN#81

AuGLAR	±5°
X.	±0.40
X.x	±0.30
X.xx	±0.20
X.xxx	±0.15
UNSPECIFIED TOLERAuCES	

www.helloxkb.com www.helloxkb.cn www.xk-dg.cn

XKB 星坤 Connection

XKB INDUSTRIAL PRECISION CO.,LIMITED

DESIGN	阿树	VIEW:	MODEL TYPE: /
CHECKED		UNIT: mm/in	PART NO.: X3091WR-XXX-9TV15
APPROVED		SIZE: A4	DWG NO.:

SCALE	PAGE	REVISION
N/A	2/2	A2